CHAPTER 7
DUKE UNIVERSITY

School of Engineering
Department of Biomedical Engineering
136 Hudson Hall
Durham, North Carolina 27708-0281

Principal Investigator:

Laurence N. Bohs (919) 613-5155
lnb@egr.duke.edu

ADAPTED BUMBLEBALLS FOR PLAY THERAPY

Designers: Thomas Pawlowski, Sam Cho
Supervisor: Lenore Champion
Professor: Dr. Laurence N. Bohs
Department of Biomedical Engineering
Duke University
Durham, North Carolina 27708

INTRODUCTION

Children with neurological disorders often have limited motor skills. Playing with objects that stimulate the senses helps facilitate their recovery and enables them to learn about cause and effect relationships. The objective of this project was to modify a commercial toy, Bumbleballs, for children with brain injuries. This was achieved by replacing the small activation switch on the original toy with several different activation methods, including:

- A large touch switch,
- A voice sensor,
- A photo sensor,
- A remote switch, and
- a magnetic sensor

SUMMARY OF IMPACT

The modified Bumbleballs toy enables children to learn for themselves how to play and operate the toy without aid from the therapist, and enhances their learning of cause and effect principles involved in activating the different Bumbleballs. According to the client supervisor, an occupational therapist, "The modified Bumbleballs allow children who are motorically impaired or simply too young to access a normal Bumbleball some control over a simple toy, which is an effective and stimulating activity."

TECHNICAL DESCRIPTION

Photo ball

The photo ball (Figure 7.2) incorporates 11 photoresistors that are mounted symmetrically on the surface of the Bumbleball. These photoresistors are connected in parallel in the base-biasing network of a Darlington transistor switch (GE-D44E1). When a flashlight is shined on one or more of the photoresistors, the transistor switch turns on, which activates the motor of the Bumbleball. The ball is active as long as light flashes on it. Four LEDs mounted to the ball's surface turn on when the ball is activated, allowing the movement of the ball to be seen in a dark room.

Figure 7.1. Child Playing With Large Switch and Audio Bumbleballs.

Large switch ball

The schematic for this ball is shown in Figure 7.3. A large pushbutton switch is attached to the surface of the ball. When the switch is pressed, it triggers a 555 timer, which provides an activation duration of 10 seconds. A power transistor provides sufficient current to drive the motor. All circuitry is enclosed in the ball.

Audio ball

The audio ball (Figure 7.4) uses a microphone mounted on a small external box that is tethered to the Bumbleball by a 4-foot wire. The signal from the microphone is high pass filtered, amplified, and compared to a threshold before triggering a 555 timer and power transistor circuit. A switch on the external box selects one of two threshold levels, which allows the ball to be activated by relatively louder or softer sounds. The ball activates for 5 seconds after a sound exceeding the threshold is made. Two AA batteries power the microphone and associated circuitry.

Remote ball

The remote ball uses a Remote Radio Saucer Switch (Enabling Devices) for activation. The receiver pack plugs into a 1/8" jack on the side of the ball. When the remote switch/transmitter is pressed, the receiver closes a relay that connects power to the Bumbleball. The ball runs continuously as long as the remote switch is depressed. An additional 1/8" jack mounted on the remote transmitter allows any switch to be used.

Magnetic ball

The magnetic ball (Figure 7.5) uses 11 magnetic reed switches, connected in parallel and attached symmetrically to the surface of the Bumbleball. A magnet, attached to a "magic wand", closes a reed switch when it is brought within 1.25" of the switch. The circuit provides a 4 second duration of activation whenever one of the switches is activated.

The large button and photo balls cost $5 to $8. The magnetic and remote ball cost $80 each. The bumble balls alone cost $10.

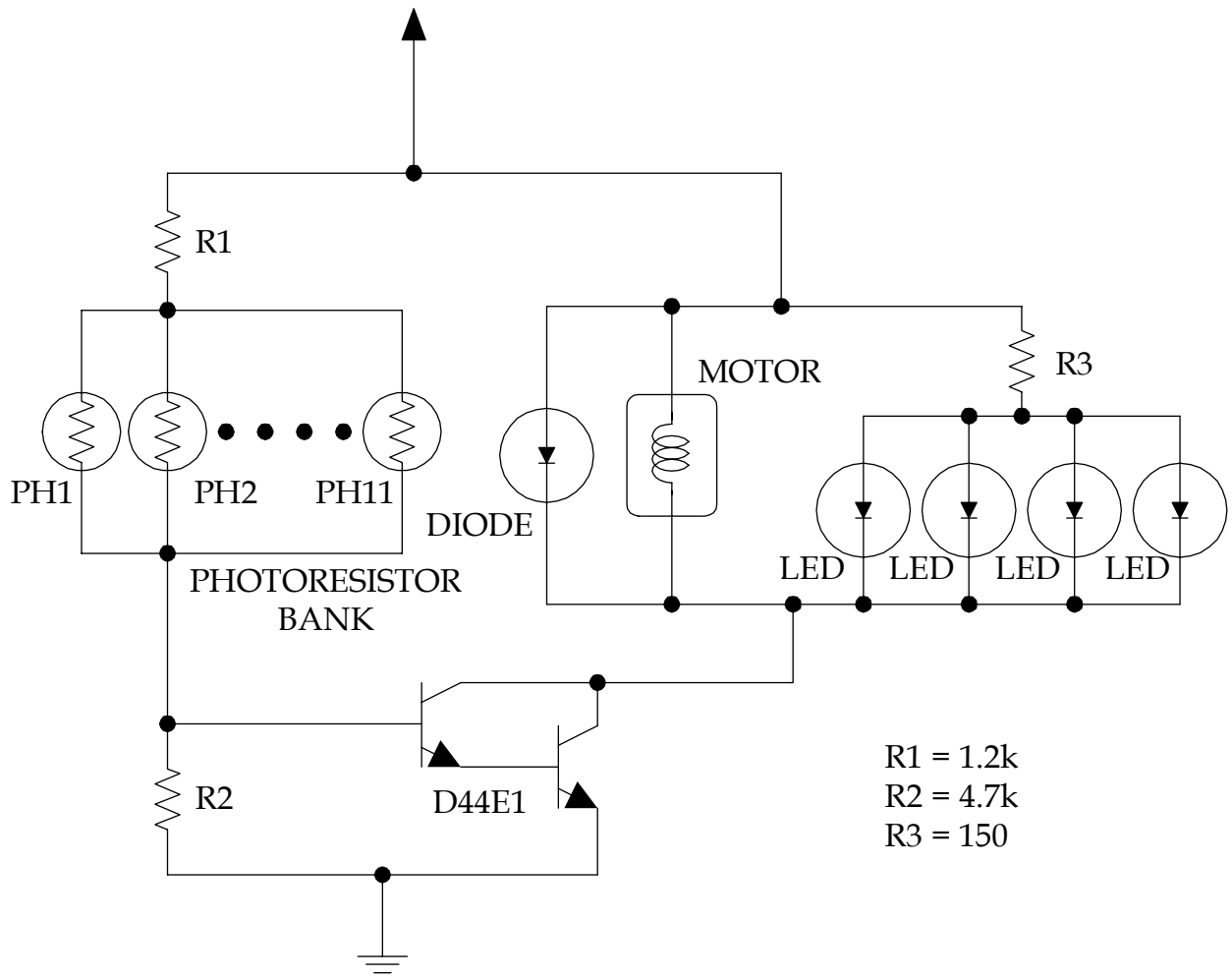

Figure 7.2. Photo Bumbleball.

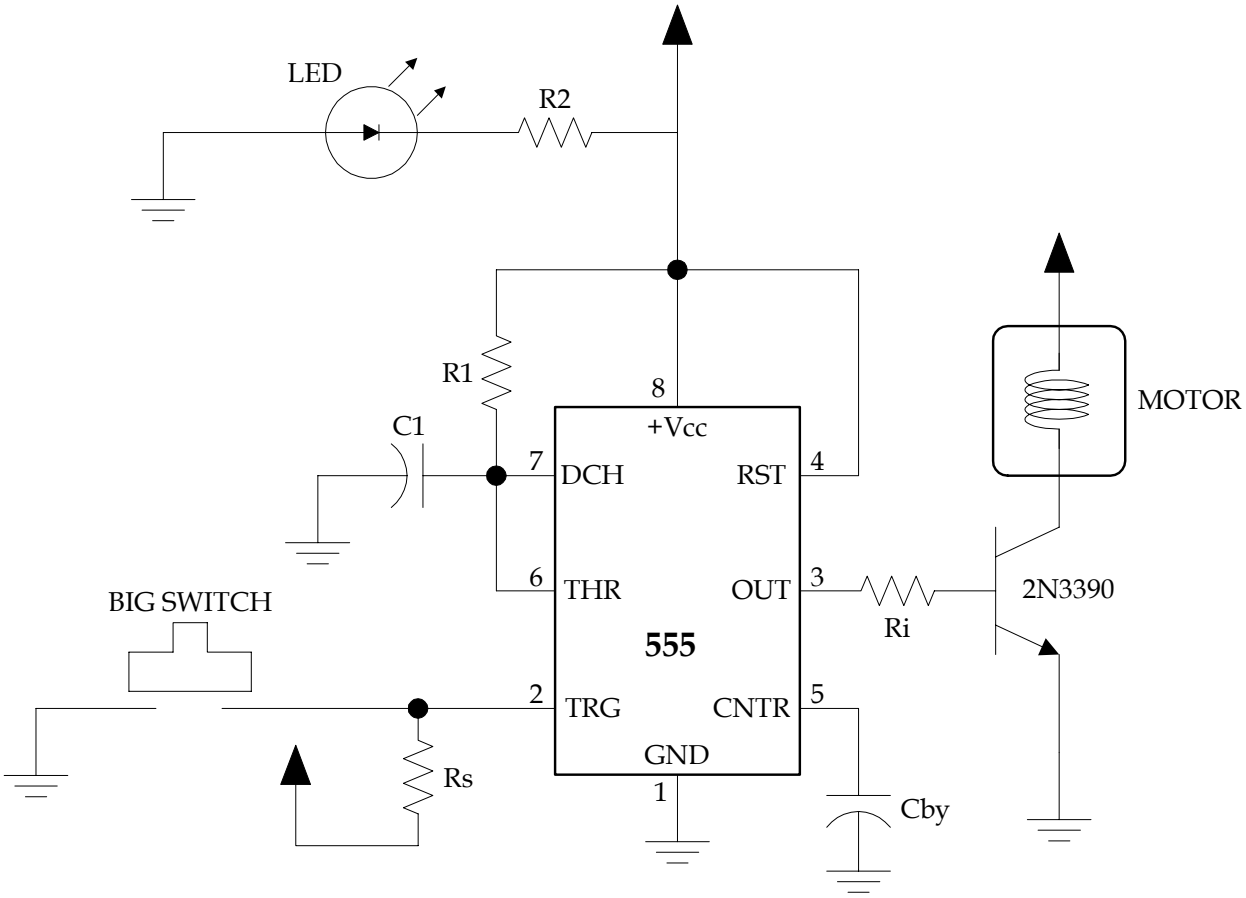

R1 = 4.71 M
Rs = 100 K
Rt = 12
R2 = 150

C1 = 2.2 uF
Cby = 0.1 uF

TRG = TRIGGER
DCH = DISCHARGE
RST = RESET
THR = THRESHOLD
CNTR = CONTROL VOLTAGE

Figure 7.3. The Large Switch Bumbleball.

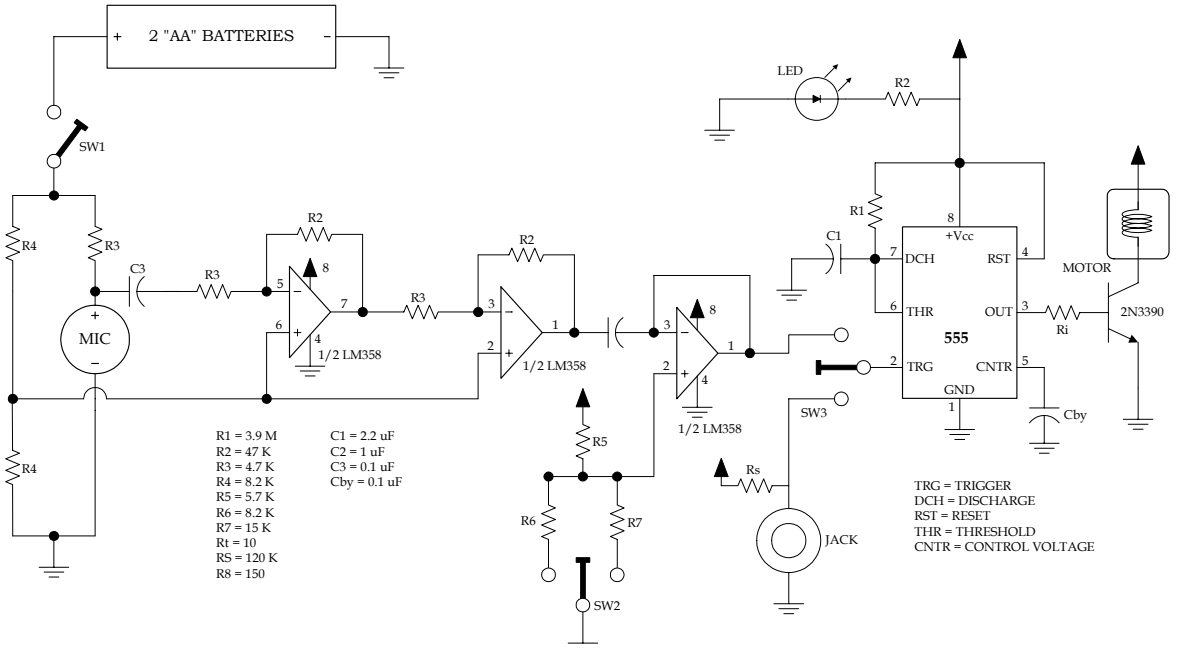

Figure 7.4. Audio Bumbleball.

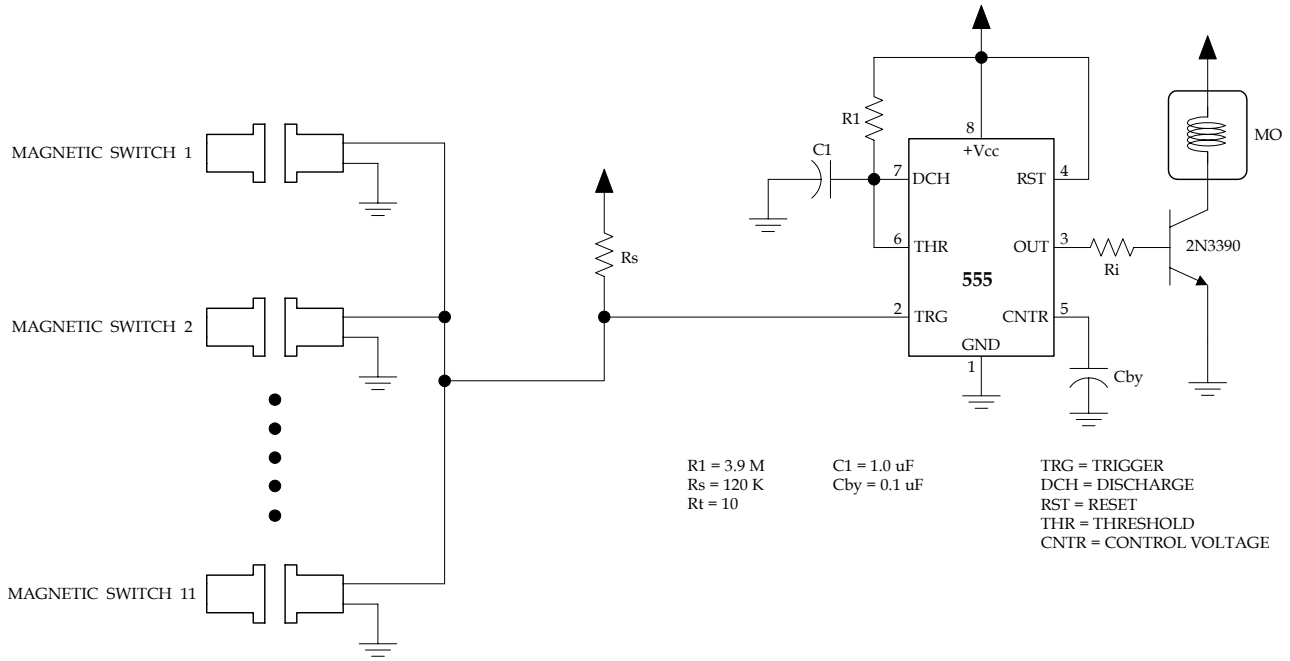

Figure 7.5. Magnetic Bumbleball.

PORTABLE STIMULATION AND ASSESSMENT TOOL

Designers: Kit Yee Au-Yeung, Daniel T. McCormick
Supervisor: Mary Caldwell
Professor: Dr. Laurence N. Bohs
Department of Biomedical Engineering
Duke University
Durham, North Carolina 27708

INTRODUCTION

A portable sensory stimulation and assessment device was designed to aid therapists in the evaluation of patients recovering from head injury and coma. Currently, available devices are large and often occupy much of a room. The Portable Stimulation and Assessment Tool (PSAT) effectively tests four sensory areas: tactile, visual, auditory, and olfactory.

SUMMARY OF IMPACT

According to the client supervisor, and occupational therapist in pediatric rehabilitation, "The stimulator allows us to evaluate cognitive awareness and sensory status at bedside in one session, and from that to develop treatment strategies on extremely motorically involved patients. Prior to this compact unit, a full assessment may have taken the therapist several consecutive trips to bedside".

TECHNICAL DESCRIPTION

The PSAT consists of four independent systems, which test four sensory areas: tactile, olfactory, visual and auditory.

The tactile probe is physically and electrically independent of the rest of the device. It utilizes a miniature vibration motor powered by a single AAA battery, encased within a penlight housing. A vibrating pager motor is used because of the small size and low power requirement. The activation switch is the push-button of the original penlight.

The olfactory stimulation system uses an air freshener, which is mounted flush to the back of the PSAT. The freshener is replaceable through the battery compartment. A mechanical slider opens small slits in the back of the PSAT to allow the scent to emanate from the cartridge.

Figure 7.6. Portable Stimulation and Assessment Tool.

The auditory, visual and LCD circuits (Figure 7.7) are controlled by a Basic Stamp II microprocessor. A pushbutton switch updates the message displayed on the LCD screen, such as "blink your eyes". A slide switch controls the backlight on the LCD screen. Rocker switches activate the visual stimulation, melody generation, and intensity functions. A serial port is installed on the side of the device to reprogram the microprocessor. The intensity rocker switch controls the flashing rate of the visual system and the volume of the auditory system.

The visual system comprises 19 LEDs arranged in a pattern of three concentric rings consisting of 1, 6, and 12 LEDs, respectively, per ring. The duration that each ring is lit differs depending on the state of the intensity switch: 200 ms for low and 85 ms for high. A Darlington transistor relay powers the visual system.

The auditory system has three functions:

- Melody generation,

- Message recording,
- Playback, and
- Amplification.

The record and playback is usually in stand-by state. When the melody generation function is activated, power to the record and playback function is removed to prevent distortion. The record and playback function allows a 20 second message to be recorded. The melody generation function uses a low power differential amplifier (LM386) designed for audio applications to improve sound quality. One of three different melodies is selected using a slide switch.

The device is powered by 4 AA batteries in series, and consumes at most 150 mA. The device is contained within a 4″x7.5″X1.3″ plastic casing. The total cost is $240.

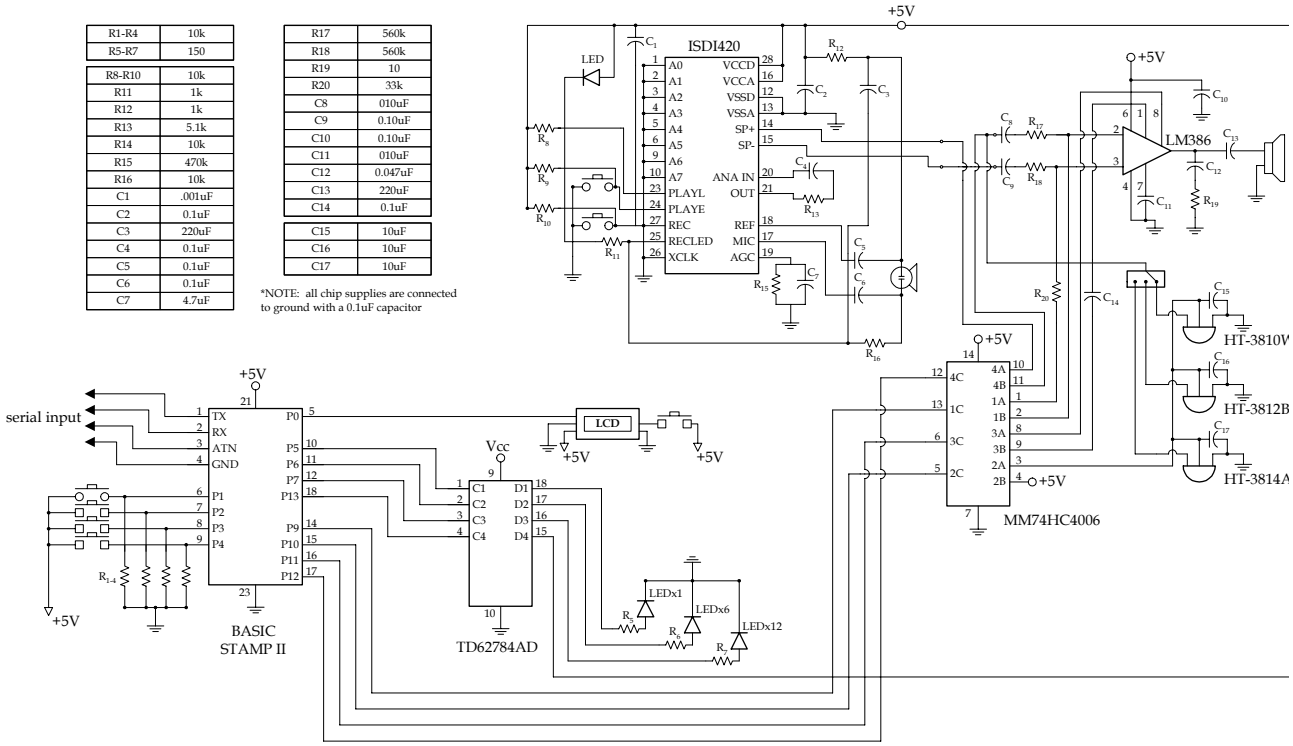

Figure 7.7. System Schematic.

REMOTE CONTROLLED TALKING SPINNER

Designers: Steven Gebhart, Jennifer Meuchel
Supervisor: Sue Porr, Pinehurst Elementary School
Professor: Dr. Laurence N. Bohs
Department of Biomedical Engineering
Duke University
Durham, North Carolina 27708

INTRODUCTION

Commercial audio spinner devices provide only a one-to-one means of communication through a small display board. An analogous device with a large board was designed for use in a classroom of students who are non-verbal and have visual impairments. The user controls the Remote Controlled Talking Spinner (RCTS) through a front-mounted user panel and a remote light-touch switch. The spinner of the RCTS can be moved to 2 to 6 different positions. A recordable message is announced at each position.

SUMMARY OF IMPACT

According to the client supervisor, an elementary school occupational therapist, "This device is used as a classroom tool to increase teaching options, learner access, and overall inclusion in the program. The project impacts several notable areas in this classroom. First, the switch-operated board allows students who cannot physically access the board during circle time to be more participatory in circle time activities. This is a step towards more inclusion for those students. The switches are also motivators for all students and assist in keeping their attention to the tasks presented in the class. Finally, the device as a teaching tool will expand the methods of presenting academic material to a classroom with diverse needs".

TECHNICAL DESCRIPTION

The RCTS is controlled by two Basic Stamp II microprocessors, which control the movement of the pointer as well as playback/record of messages when the pointer is at different positions. All the electronics are housed in an 8"x12"x3" aluminum control panel mounted on the bottom front of the display board. The control panel also houses an LCD display, volume and speed controls, and a speaker and microphone. When the cordless Big Red switch is pressed, the pointer rotates, driven by a stepper motor. A playback/record circuit announces recorded messages as the pointer pauses on each choice. The device chimes when the user releases the switch to indicate that a selection has been made, and repeats the final choice.

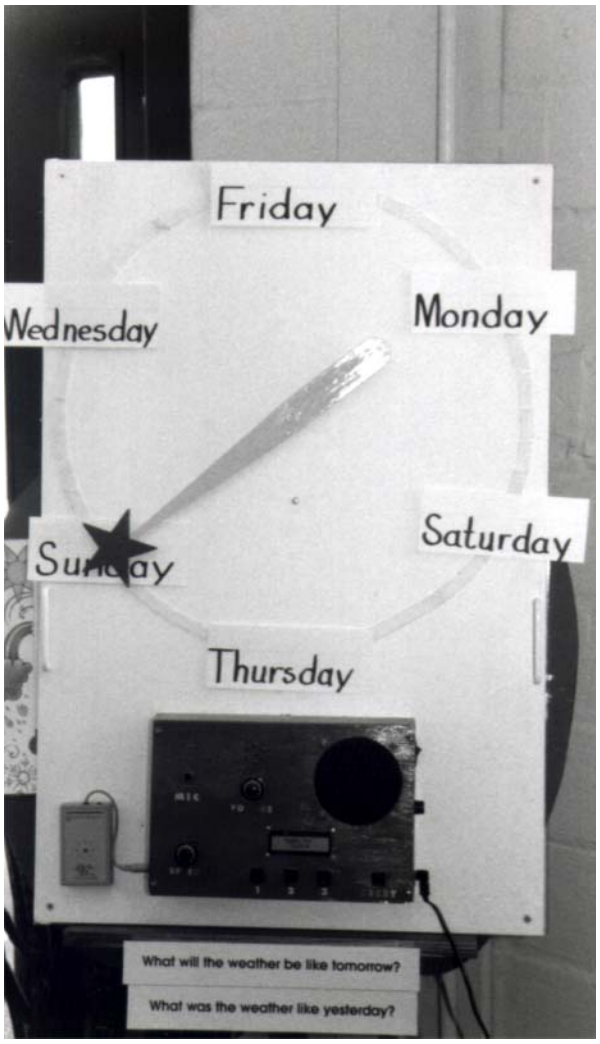

Figure 7.8. Remote Controlled Talking Spinner.

The microprocessors monitor the state of the 4-user input buttons, and control the driving of the stepper motor, the speed of spinner, and the announcing and displaying of messages. The 12 VDC 2Ω stepper motor driver circuit uses a TTL 7406 open-collector

hex inverter/buffer and four push-pull amplifier circuits. Two 10-turn potentiometers control the frequency of switching, which updates the speed of the spinner, and the volume of recorded output.

The record/playback circuit consists of an ISD2560 recording chip, an LM386 audio power amplifier and 8Ω speakers and a condenser microphone. The chip has a 60 second recording duration - 10 seconds for each message.

The receiver of the commercial cordless Big Red switch is mounted on the front panel of the RCTS and modified to receive power from the control box, instead of from its own batteries.

The project is powered by a 12VDC wall adapter, and consumes a maximum of 375 mA.

The cost of the device is approximately $500.

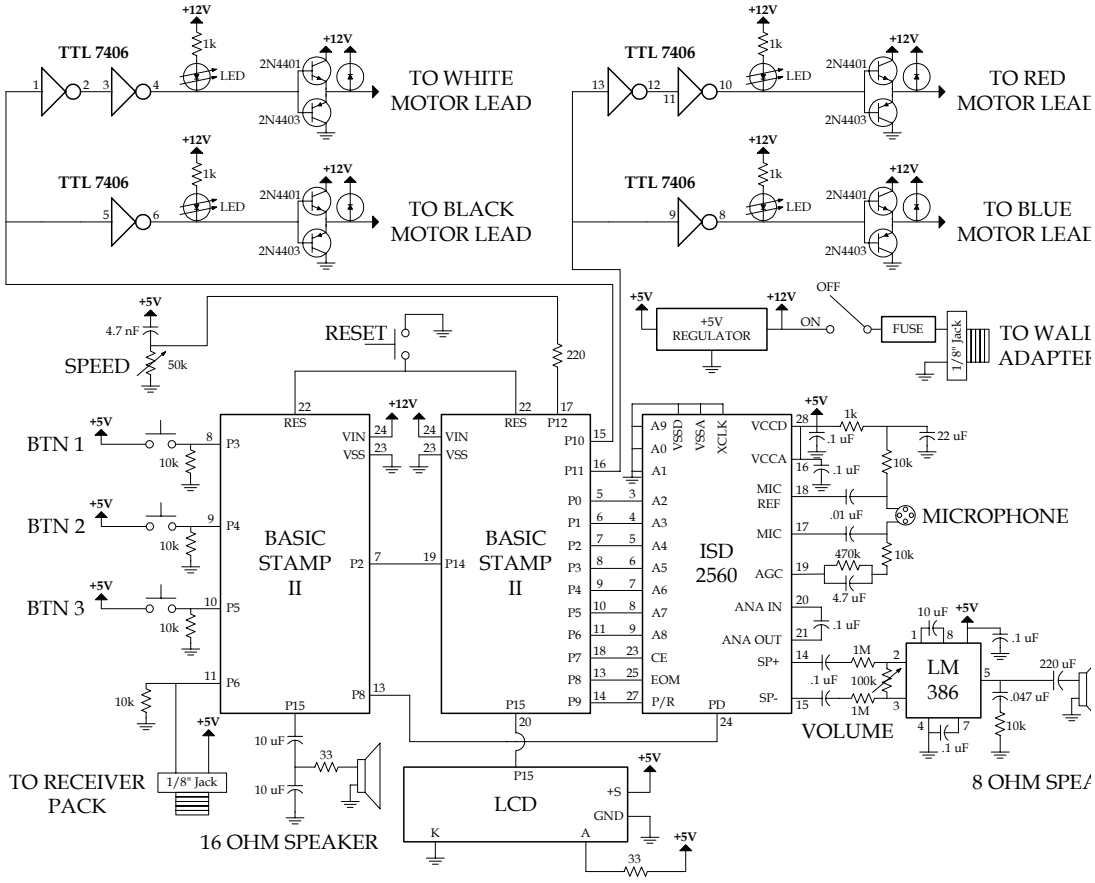

Figure 7.9. RCTS Circuitry Schematic.

HAMMERED BASS

Designers: Cory Weiner, Lindsay Johnson
Client: Mike Hamer
Professor: Dr. Laurence N. Bohs
Department of Biomedical Engineering
Duke University
Durham, North Carolina 27708

INTRODUCTION

The Hammered Bass (HB) is an electronic instrument designed for a client, who had been a professional electric bass player before being paralyzed in an accident. Since he can no longer play the bass, a custom instrument was designed to be played with hammers, using the techniques the client currently uses to play the hammered dulcimer. The HB consists of two rows of rubber pads, representing two octaves of notes, which when tapped trigger digital MIDI signals that create synthesized bass sounds.

SUMMARY OF IMPACT

The HB gives the client the freedom to continue a career using his talent with the bass guitar. The casing is designed with the proper dimensions, weight, and tilting options to accommodate a limited range of motion, and allows for the most comfortable and effective playing position. The HB has been easy to learn because of the client's previous experience with a piano keyboard layout and his use of dulcimer hammers. With the HB, the client is able to play with maximum speed again, giving him the ability to have fun making a living playing the music he loves. In addition, he can create new effects such as "rolls", which were not possible on the electric bass.

TECHNICAL DESCRIPTION

The HB (Figure 7.11) is a Musical Instrument Digital Interface (MIDI) controller that plays two full octaves below middle C.

The HB has 24 1.5 inch neoprene rubber trigger pads protruding ¼" above the top surface. Below each pad is a thin rigid disk that is attached to a piezoelectric sensor. The piezoelectric sensors are then attached to circular silicone rubber pads that have been quartered and glued to a Lucite board. The silicone pads inhibit the propagation of vibrations along the board, which can cause cross-triggering of notes.

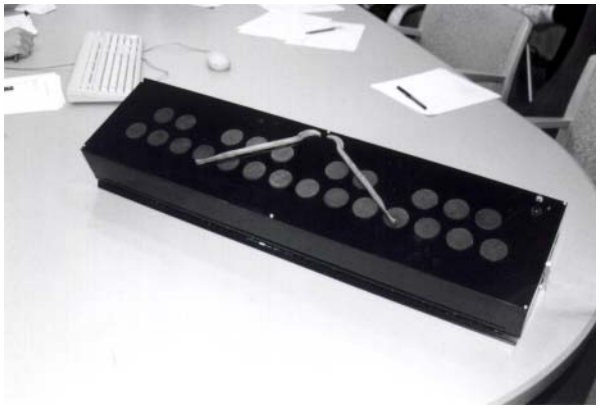

Figure 7.10. . Hammered Bass.

Each sensor is connected to a voltage divider, peak detector and gain circuit (Figure 7.11). The voltage divider allows the sensitivity of each sensor to be adjusted, and the peak detector allows the positive peak amplitude of the hit to be fed to an analog-to-digital converter after a gain of 2.2. The amplifier allows the client to produce a wide range of amplitudes with a small range of striking forces.

Signals from the sensor circuits are connected to MIDI brains (PAiA Electronics, Edmond, OK), which were purchased in kit form. Each brain accepts 8 sensor inputs; three brains accommodate all 24 sensors. An ADC8609 Analog to Digital Multiplexer, which also converts the input analog pulse to a digital sequence, monitors the eight inputs. The MIDI Brain assigns each of its inputs to a note, stored in an on-board EPROM. When a voltage is detected at an input, the brain translates the voltage amplitude into MIDI velocity data. This information is then combined with the assigned note number to construct the proper corresponding MIDI signal, which is then transmitted through the Brain's MIDI Out port. The EPROM is programmed to play

notes commonly used on a bass guitar. The MIDI brains are daisy chained together, having the MIDI out of the previous brain going into the MIDI of the next. The output of the third brain connects to a synthesizer, which can be programmed to produce any desired sound. The MIDI input of the first brain also allows input from other MIDI instruments.

The HB is enclosed in a black acrylic case, 32"x8"x4.125". An aluminum bar is placed within ridges on the bottom to allow for different playing angles: 20°, 30° or 45°. A 6VDC adapter port provides power from a standard wall outlet.

The total cost of the HB is $819.

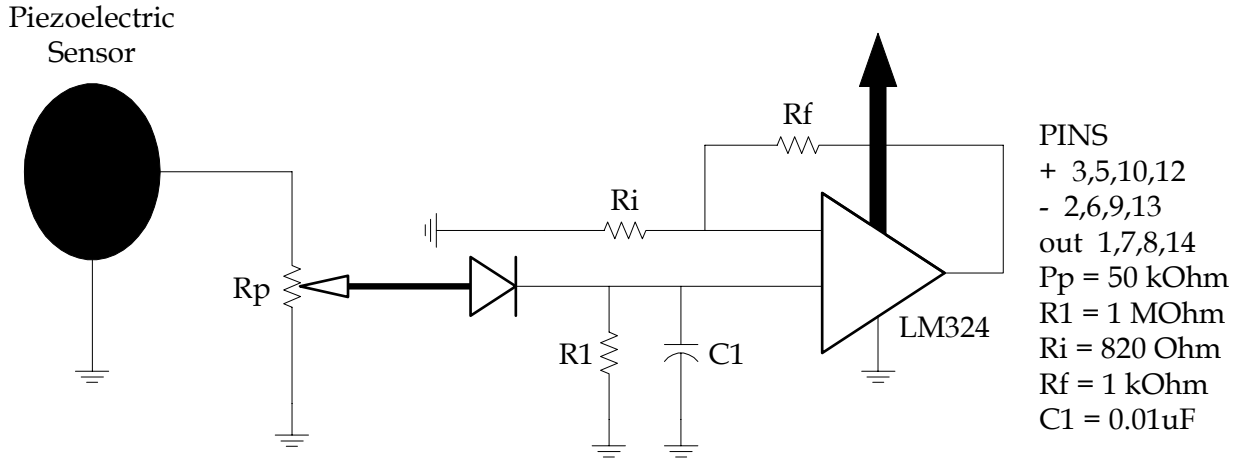

Figure 7.11. Trigger Circuit Schematic.

ASSISTIVE COMMUNICATION DEVICE

Designer: Daniel McCormick
Client: Jackson Fischler
Professor: Dr. Laurence N. Bohs
Department of Biomedical Engineering
Duke University
Durham, North Carolina 27708

INTRODUCTION

A supplementary communication device was designed for a six-year old boy who has limited control over his body from the neck down and cannot use speech to communicate with others. Currently he uses a DynaVox to communicate but it does not provide an adequate level of self-sufficiency in many situations. The new device allows the client to communicate "yes", "no" and simple phrases using a single switch.

SUMMARY OF IMPACT

The client's assistive communication device provides an effective and reliable means of basic communication. He is able to readily answer simple yes and no questions as well as signal for attention both at home and at school. In addition, the client can communicate six custom messages. The radio frequency connection between the main unit and the output unit allows him to communicate a request from a distance. For example, it is now possible for the client to call to his mother from his bedroom if his mother is in the kitchen. Most importantly this device allows him more independence; he does not require assistance once the device has been connected and activated. This allows the child to use the device in a variety of situations.

TECHNICAL DESCRIPTION

The device consists of three sections: the main unit, the selection unit, and the output unit. The device can be set to three different modes: school, home, and switcher. In all modes, the device scans through all possible options; when the desired message is reached, the child activates the message using a single switch.

The selection unit provides cues to the client through LED arrays or a LCD display. The LCD displays 2 rows of 16 standard ASCII characters or custom characters. A small slide switch allows the backlight to be activated, or turned off to conserve power. In addition, if a selection is not made within a minute the unit goes into sleep mode to conserve power.

Figure 7.12. Assistive Communication Device.

In the School mode, the client selects "yes", "no", "attention" or "urgent attention", which lights a corresponding LED on the remote output module. The Home mode is identical to the School mode except that audio is added to the output. The Switcher mode has the four standard messages but also six additional custom digitized voice messages, each of which can be up to 18 seconds in duration.

The front panel of the main unit contains controls for mode selection and volume, the power switch, the audio speaker and the microphone. An 8-pin DIN connector on the main unit provides power and control for the selection unit, which contains a row of LEDs (for "yes", "no" and "attention") as well as an LCD display (for selecting audio messages). A 1/8" switch jack is located above the DIN connector. On the lower left side is a 9-volt output that provides an alternative power source for the output module. A male 9-pin D serial connector is provided on the upper left of the device so a serial cable can be attached for reprogramming. The voltage supply is conditioned by a low quiescent current voltage regulator (LP2954AIT).

A Basic Stamp II microprocessor monitors the state of the input buttons and controls operation of the device. The radio frequency communication between the main unit and the output unit comprises a Holtek encoder and decoder (HT-6104 and HT-6034) and a Linx transmitter and receiver (TXM-315LC and RXM-315LC). An ISD33120 chip is used for record and playback of messages. The audio output level is adjusted using a log-scale potentiometer on the front of the device. A 9V battery powers the output unit, but it can also be powered from a wall transformer to conserve battery power.

There are three different programs associated with the ACD. The first two are written in P-BASIC. The first is the normal run program. The second allows the user to records messages and listen to them. The third program is written in C and runs on a normal PC. This program is used to interface with the ACD through its serial connection.

The cost of the device is approximately $600.